MUSIC FROM ELECTRONS

by Robert Moog

ON the Tuesday evening of January 31, 1928, a capacity crowd filled the New York Metropolitan Opera House. The occasion was nothing as conventional as the performance of an opera, however. The audience braved the winter evening to witness what was then a remarkable novelty. Leon Theremin, a Russian physicist, was to perform on a musical instrument which he had developed and named after himself. The

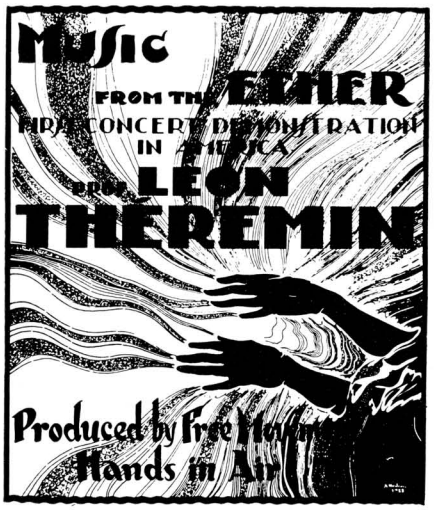

METROPOLITAN OPERA HOUSE
Tuesday Evening, Jan. 31st, 1928 at 8:30 P. M.
Tickets $4.40 to $1.10 (Tax Included)
Now on Sale at Box Office
Wurlitzer Piano
RECITAL MANAGEMENT ARTHUR JUDSON
STEINWAY HALL NEW YORK

Fig. 1. Program cover for 1928 concert.

instrument was made of radio components and was operated by electricity. Most important, however, was the fact that Professor Theremin would play his instrument *without touching it.*

The printed programs which the audience held set the proper mood: *Music from the Ether*, produced by a pair of hands reaching out from a raging inferno (see Fig. 1). Rudolf Wurlitzer introduced Professor Theremin and explained to the audience that Theremin would play his instrument by varying the position of his hands in the space around it. The Professor then proceeded to play. Although Theremin was a creditable musician, the audience was undoubtedly more impressed by the mysterious undulations of his hands than by the musical quality of his performance.

To show that the theremin was a worthy musical instrument as well as an intriguing novelty required the devoted efforts of several fine musicians. Fortunately, a small body of artists extended the frontier of theremin music so that all but the most conservative critics granted the theremin a place in the realm of "serious" music. The best known of these pioneers are Lucy Bigelow Rosen, Clara Rockmore, and Elena Moneak, who gave many public concerts in the 1930's, and Jeno von Takacs, who composed works for the theremin.

As a commercial venture, the manufacture of theremins was not a notable success. Shortly after Theremin's first concert the Radio Corporation of America bought his patent and began production of the instruments. Introduced at a time when few people were willing to invest in anything, the RCA theremins did not sell very well. After making only a few hundred instruments RCA discontinued production. With no instruments being produced, theremin music seemed to be on its way to oblivion. Only recently has there been a promising renewal of interest.

Two years ago we completed the design of a theremin which is played in the same manner as the RCA instrument, but which utilizes more modern circuits and components. In addition, it incorporates some features which were not present in the original. This instrument, the Model 351, will be described and compared to other musical instruments.

The Model 351 theremin is an electronic device played by movement of the performer's hands in the space surrounding it. Pitch of the tone is determined by the distance between the performer's right hand and the pitch antenna, Fig. 2, which is a long slender rod. Volume of the tone is determined by the distance between the performer's left hand and the volume antenna, a flat metal plate. Two switches on the front panel enable the performer to select the tone quality or timbre suitable to the music being performed. The entire instrument, except for the amplifier, is housed in a wooden cabinet 20 in. long, 11 in. deep, and 6 in. high. It weighs less than 20 lbs.

Pitch Control

Musical instruments are traditionally grouped in categories according to the way in which the tone is produced: string, brass, wood wind, and percussion. The theremin belongs in none of these categories, since its tone is produced by electronic circuits. This in itself is not enough to characterize it, however; we must also state that the pitch is controlled directly by the position of the performer's hands. If we were to divide musical instruments according to the way in which the pitch is controlled, we would have three categories:

Text continued on page 18

Fig. 2. Pitch, volume depend on the distance of player's hands from antennas.

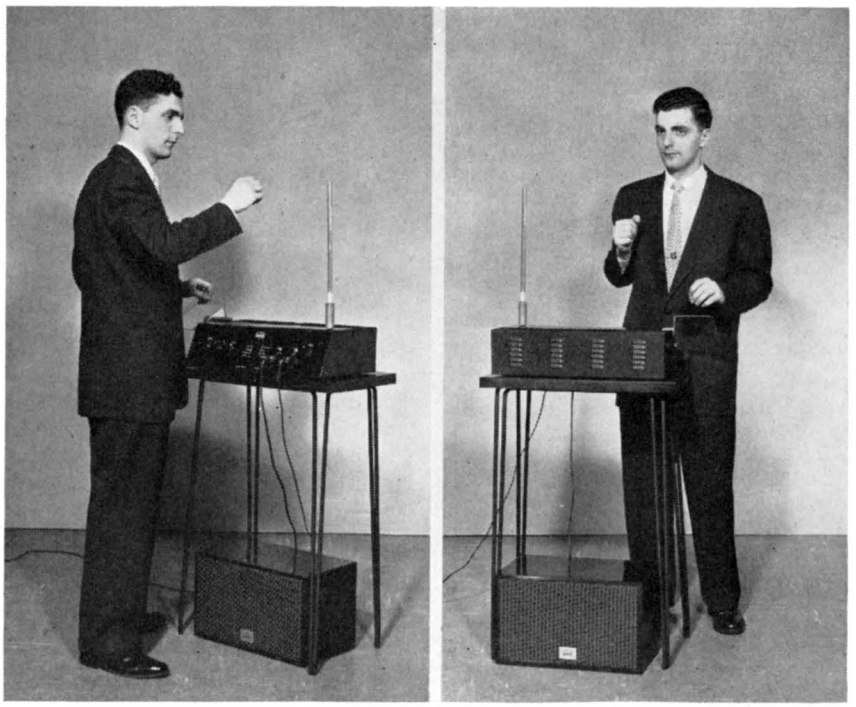

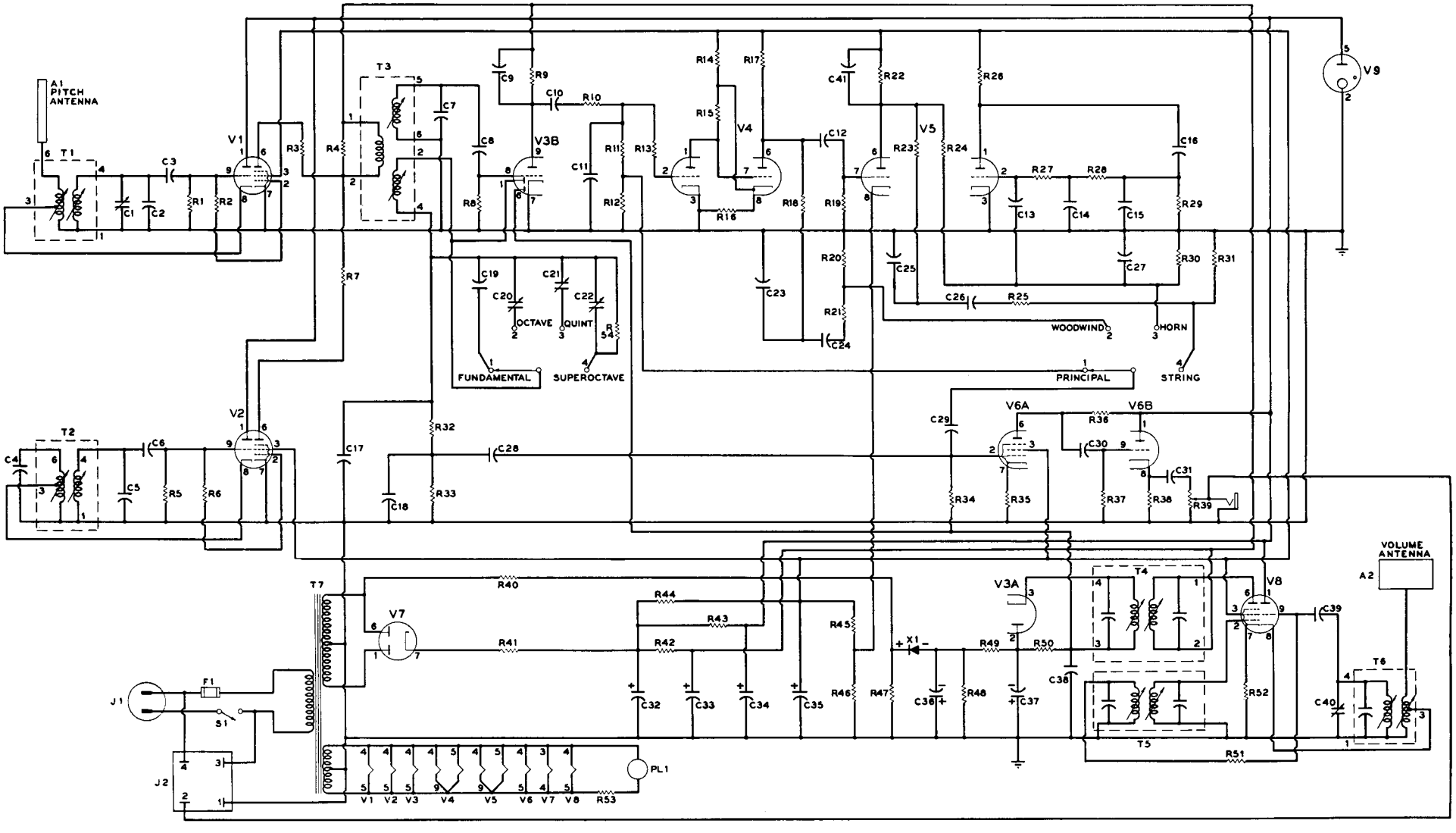

Fig. 3. Complete schematic of a commercial theremin. Outputs for a companion amplifier-speaker, and for a standard hi-fi system input, are supplied. Timbre and overtone are controllable.

Continued from page 16

1) Instruments which have a separate key or valve for every note (a piano or clarinet, for instance).

2) Instruments for which pitch is controlled partly by keys, and partly by the player himself (trumpet, French horn).

3) Instruments which have no keys, and for which pitch is controlled by the position of the performer's hands (stringed instruments, theremin). This list is arranged in order of increasing flexibility in pitch control. On the piano, only those pitches for which there are keys can be produced. With the theremin, however, any pitch can be produced. There are several reasons why

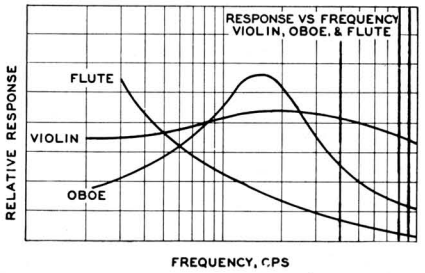

Fig. 4. Harmonic reinforcement curves for various musical instrument bodies.

this is desirable. First, it is often desired to go from one note to another in a glissando, or glide. Obviously, this cannot be done smoothly on a piano. Second, in many systems of harmony the intervals between notes are different from those of the traditional tempered scale. Even in playing classical music, departure from the tempered scale is often made. For instance, a good violinist may differentiate between G-flat and F-sharp but, on the piano, which is tuned to the tempered scale, G-flat and F-sharp are the same note.

So much for the musical aspect of pitch control for the theremin. How is this continuous pitch control achieved? The pitch circuit takes advantage of the fact that the hand is a conductor of electricity. Its connection to the rest of the body effectively grounds it. Therefore, the hand can be used as a grounded plate of a capacitor. If the hand is moved with relation to another electrical conductor, we have a variable capacitor. It is this variable hand capacitance which is used to control the pitch of the theremin.

Of course, the hand capacitance is very small — only a few micromicrofarads. It could not be used to tune an audio oscillator directly. A special type of pitch generator, called a beat frequency oscillator, is used in place of a conventional audio oscillator. The beat-frequency oscillator in the Model 351 theremin consists of two radio-frequency oscillators operating at frequencies very close together. The oscillator outputs are fed into a mixer circuit which effectively subtracts one frequency from the other. If the difference or beat frequency lies in the audio range, the mixer will deliver an audio output. For instance, if one RF oscillator is operating at 200 Kc and the other is operating at 199 Kc, the output of the mixer will be 1,000 cps. A small percentage change in frequency in one of the oscillators will result in a proportionally larger change in the audio output. Thus, with one of the RF oscillators operating at 200 Kc, the entire audio spectrum can be covered by changing the other oscillator frequency only 10%.

Fig. 3 is a schematic diagram of the Model 351 theremin. The beat-frequency oscillator which generates the pitch is composed of V1, V2, the triode section of V3, and their associated components. The oscillator coil (T1) of the variable oscillator V1 is designed to effect a relatively large change in the frequency of oscillation for a small change in capacitance of the pitch antenna caused by variation of hand capacitance. The fixed oscillator V2 is identical with the variable oscillator, except for the absence of a pitch antenna. The RF signals from the two oscillators are fed through mixing transformer T3 into a mixer, which is the triode section of V3. The output of V3 is passed through an RC filter composed of C9, R10, and C11, which removes the RF components and allows only the audio signal to pass.

At that point the signal has very little harmonic content. This might appear at first to be desirable. Musicians often call a pleasing tone a "pure" tone, but it is usually far from pure in the sense of being free from overtones. For instance, the fundamental component of a violin tone is only a small part of the total. The remainder of the tone consists of harmonics, or overtones, whose frequencies are integral multiples of the fundamental frequency. These harmonics are not perceived by the listener as discrete tones, but instead give the fundamental tone an ear-pleasing timbre.

Harmonic Generation

In all conventional musical instruments, the tone source, be it a string, a reed, or the player's lips, generates all the harmonics of the fundamental tone. Before the sound is released into the air, it is transmitted through the body of the instrument, which attenuates some harmonics and allows others to pass. Thus it is the body of the instrument which determines, for the most part, its timbre. In the flute, harmonics are attenuated sharply, giving the tone a mellow quality. All harmonics are allowed to pass in the violin, although some are attenuated slightly. That is why the violin has a rich pleasing tone. The oboe body is highly resonant, reinforcing a narrow band of harmonics and attenuating the rest. The result is a sharp, nasal quality which makes the oboe tone easy to identify. Instrumental body transmission characteristics are shown in Fig. 4.

In the Model 351, the audio signal is passed through special circuits which introduce the desired harmonics, and then through attenuating filters which are electrical analogs of the body transmission responses of conventional musical instruments. The signal, as it enters V4, is shown in Fig. 5A. V4 and its associated circuitry act as a clipper, so that the signal emerges as a square wave. A square wave contains only odd harmonics, however. If you have ever heard a square-wave test on an amplifier, you know that a square-wave tone is hollow and woody, like that of a clarinet. While the tone may be pleasing, it is too distinctive to be the basis for more than one timbre. The next circuit, consisting of the left section of V5 and its associated components, forms a wide pulse from the square-wave input. This pulse, which contains the fundamental tone and *all* its harmonics, is fed into two filters. One is an RC filter which gives the signal a string-like quality. The other is a resonant filter involving a

Fig. 5. Outputs of tone shaping circuits.

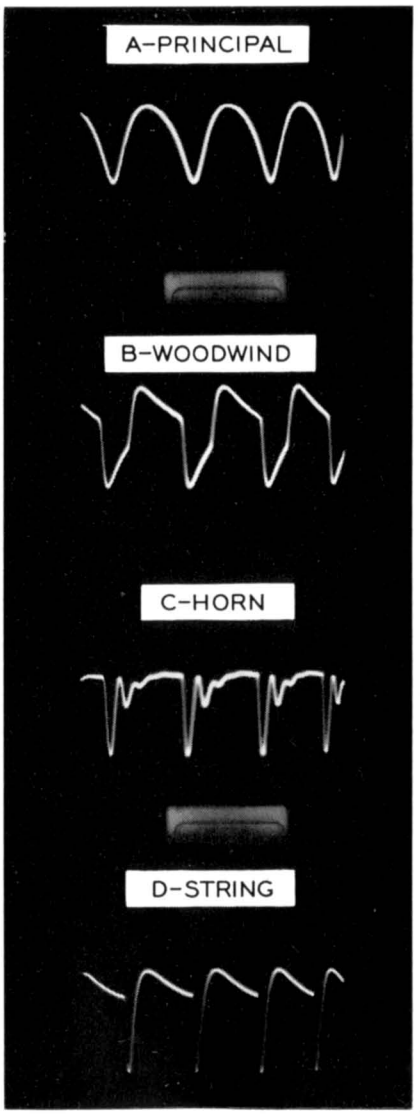

phase-shift amplifier which gives the signal a sharp, horn-like quality. The outputs of these two filters, together with the output of a filter fed by square waves, and a signal taken directly from the beat-frequency oscillator, are all connected to switch S3. The performer can select the timbre which he desires simply by setting this switch. Wave forms of the four timbres are shown in Figs. 5A through 5D.

In addition to being able to select one of four timbres, the performer can also select one of three overtones. Note that the mixing transformer T3 has two secondaries. The upper secondary is broadly tuned to the fundamental frequency of the RF oscillators, and feeds the triode section of V3. The lower secondary is tuned by one of four capacitors which can be selected by switch S2. These capacitors are adjusted so that they tune the lower secondary to one of the harmonics of the RF oscillators. The lower secondary feeds its own mixing circuit composed of a diode (pin 1 of V3) and the RC filter R32, R33, C17, and C18. The output of this mixing circuit is the audio harmonic corresponding to the RF harmonic to which the lower secondary of the mixing transformer has been tuned. For instance, if the fixed RF oscillator is operating at 200 Kc and the variable RF oscillator is operating at 199 Kc, the output of the triode section of V3 will be 1 Kc. If the lower secondary of T3 is tuned (by one of the condensers connected to S2) to a frequency of 600 Kc, it will transmit the third harmonics of the fixed and variable RF oscillators, which are 600 and 597 Kc respectively. When these are mixed, the resultant will be 3 Kc, which is the third harmonic of the 1-Kc audio fundamental. With S2 the performer can select either the fundamental, second harmonic (octave), third harmonic (quint), or fourth harmonic (superoctave). The wave forms of these harmonics, when combined with the fundamental, are shown in Figs. 6A through 6D.

Once the proper harmonics have been added, the signal can be amplified and fed into a loudspeaker. The Model 351 contains one stage of amplification, which is part of the volume-control circuit.

Volume Control

Hand capacitance is used to control the volume also. A variable RF oscillator

Continued on page 33

Parts list for the theremin is shown at right. All parts, with the exception of the variable capacitors, antennas, and transformers, are stock items which are available through distributors of electronic parts. For further information on non-standard parts, write to the R. A. Moog Company, 51-09 Parsons Boulevard, Flushing 55, New York.

Part Number	Name and Type of Part	Value, Rating, Code
A1	pitch antenna	7-301
A2	volume antenna	6-306
C1, C40	variable capacitor	25 μμfd
C2, C5, C11	mica capacitor	560 μμfd
C3, C6, C17, C18, C39	mica capacitor	180 μμfd
C4	ceramic capacitor	15 μμfd
C7	mica capacitor	1,600 μμfd
C8, C9, C12, C23, C25	paper capacitor	.001 μfd, 600 volts
C10, C14, C15, C24, C26, C28	paper capacitor	.005 μfd, 600 volts
C29, C30, C13, C38	paper capacitor	.05 μfd, 600 volts
C16, C27, C41	paper capacitor	.01 μfd, 600 volts
C19	mica capacitor	2,200 μμfd
C20, C21, C22	trimmer capacitor assembly	2-251
C31	paper capacitor	0.22 μfd, 200 volts
C32	electrolytic capacitor	80 μfd, 400 volts
C33	electrolytic capacitor	40 μfd, 400 volts
C34, C35	electrolytic capacitor	20 μfd, 150 volts
C36, C37	electrolytic capacitor	10 μfd, 50 volts
F1	fuse	2 amp
J1	power connector	
J2	connector for model 400 amplifier	
J3	connector for amplifier other than model 400	
PL 1	pilot bulb	6.3 volts at 0.15 amp (No. 47)
R1, R2, R3, R5, R6, R7, R28, R36, R49, R51	carbon resistor	33 K, 1 watt
R4, R52	carbon resistor	2.7 K, 1 watt
R8, R9, R12, R16, R19, R21, R24, R25, R26, R33, R40, R47, R50	carbon resistor	220 K, 1 watt
R10, R14, R17, R18, R20, R22, R23, R27, R30, R32	carbon resistor	100 K, 1 watt
R11, R13, R34, R37	carbon resistor	1 MΩ, 1 watt
R15, R54	carbon resistor	10 K, 1 watt
R29	carbon resistor	10 MΩ, 1 watt
R31, R48	carbon resistor	56 K, 1 watt
R35	carbon resistor	1.8 K, 1 watt
R38	carbon resistor	5.6 K, 1 watt
R39	volume control potentiometer	10 K
R41	wire wound resistor	1 K, 10 watts
R42	wire wound resistor	1 K, 5 watts
R43	wire wound resistor	5 K, 5 watts
R44, R45	wire wound resistor	7.5 K, 5 watts
R46	carbon resistor	150 ohms, 1 watt
R53	carbon resistor	22 ohms, ½ watt
S1	power switch (this is part of a silencing switch on later models)	
S2, S3	lever switch	4 position, 1 pole
T1, T2	pitch oscillator transformer	No. 3-301
T3	coupling transformer	No. 3-303
T4, T5	bandpass transformer	No. 3-306
T6	volume oscillator transformer	No. 3-302
T7	power transformer	No. 4-301
V1, V2, V6, V8	vacuum tube	6U8
V3	vacuum tube	6T8
V4, V5	vacuum tube	12AX7
V7	vacuum tube	6X4
V9	regulator tube	OA3
X1	selenium rectifier	130 volts at 20 ma

which constant output of the generator is essential at various frequencies. The output control can be varied if necessary to give the same output level at all frequencies within the range of the instrument.

This particular audio signal generator was selected as an example of modern generator design because of the features it incorporates. Step-type tuning provides for accurate setting to a given frequency, especially valuable in frequency-response checks. This circuit provides exceptionally low distortion at the output (less than 0.1% from 20 to 20,000 cps), and metered output combined with both continuously variable and step-type attenuators with selection of internal or external load. Such an instrument is tailor-made for high fidelity audio work, and an understanding of its internal operation will be helpful in employing it to maximum advantage. Understanding how a piece of test equipment works is really the first step in determining how it should be used.

In the next installment we will pursue the subject of audio signal generators further, and discuss some of the mechanics of using such an instrument. A procedure for using this generator and a VTVM for making frequency-response runs on high fidelity equipment will be described.

MUSIC FROM ELECTRONS

Continued from page 19

(the triode section of V8), similar in design to the variable-pitch oscillator, is constructed so that changes in capacitance between the left hand and the volume antenna change the frequency of oscillation. A signal from this oscillator is fed into a narrow-band RF amplifier (the pentode section of V8) so that, as the frequency of oscillation changes, the amplitude of the output of the RF amplifier also changes. This output is rectified, and the resultant potential is applied to the control grid of the control amplifier V6a. When this bias is made negative, the gain of V6a decreases; when the bias is made positive, the gain of V6a increases. By varying the capacitance of the volume antenna with the left hand, the performer is able to make the tone loud or soft, or to silence it altogether. From the control amplifier, the signal is fed into a cathode follower, and then to an external amplifier and loudspeaker.

The power supply is conventional in design. A glow voltage regulator tube is used to supply constant plate voltage to the oscillators, so that variations in line voltage do not cause variations in pitch or volume while the performer is playing.

Theoretically, any type of music can be played on the theremin. Both pitch and volume-control circuits respond instantly to changes in hand capacitance. Melodies can be played as fast as the hands can move. In practice, however, the theremin has proved itself best adapted to slow melodies which give the hands time to locate themselves accurately on each note. Slow melodies, in addition, lend themselves to the use of vibrato. The thereminist's greatest asset is his ability to impart a beautiful vibrato to the tone merely by moving his right hand back and forth through a small distance.

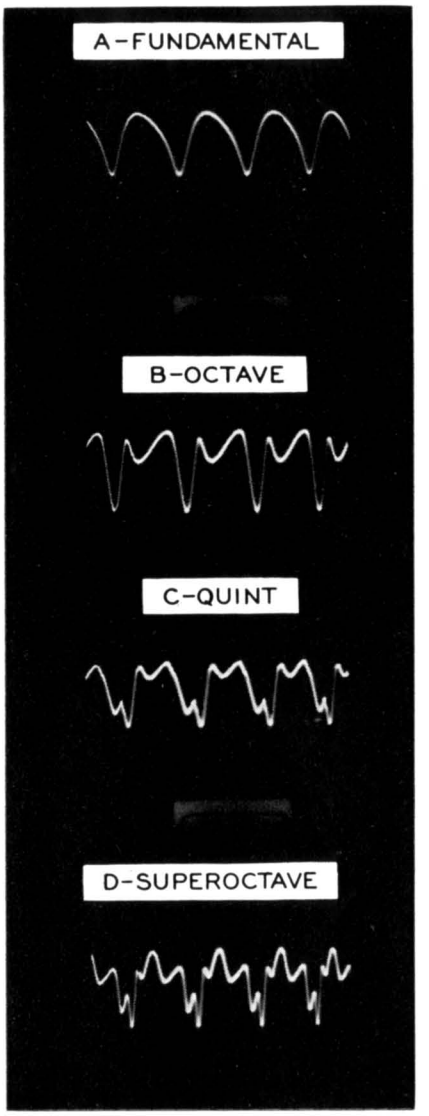

Fig. 6. Harmonics added to the original.

In this age of network broadcasting, tape and disc records, and high fidelity sound, music has enriched the lives of millions of people. The theremin was the first electronic instrument that generated, rather than reproduced, music. As such it has pioneered the field of electronic musical instruments. Because of his knowledge of electronics and appreciation of music, the high fidelity enthusiast will find the study of electronic musical instruments an interesting and worthwhile pursuit.

TAPE NEWS

Continued from page 13

the preceding program, wait through a couple of peaks to be sure the control engineer isn't already taking care of things.

Also, while recording, try to refrain from pulling up the volume of low-level passages despite the fact that nothing is registering on the record indicator. Contrary to what is apparently a very popular belief, "normal" recording volume does not mean that all of a program must necessarily be recorded at that level. Set for normal volume on the high-level passages, and let the low-volume ones take care of themselves.

The final step, once the recording is completed, is to edit the unwanted sections out of the program. In the category of "unwanted" things, I would list commercials, tedious introductory commentaries, and any loud coughs that may find their way into the program.

As an example of what might be done with a splicer and a roll of editing tape, let's take a look at a typical broadcast of a symphony orchestra over a typical non-good-music station. (I'm choosing typical examples because they are typical of the typical situation encountered by the typical recordist).

Our typical program is a live broadcast of the Hinckleyville Symphony Orchestra, coming to us from Hinckleyville's FM mediocre-music station. The program is preceded by Jed Barnstorm's Old Original Amateur Hour, which may be classed as musical in a broad sense, so it allows us to set the record indicator to read NORMAL on program peaks.

Next is a commercial for Mama Mia's Spaghetti, which is speech so it doesn't push the recording indicator past the half-way mark. But we are not fooled; we let the volume setting stay where it is.

Then comes an unidentified announcer who verifies the program listing in the newspaper — we are, indeed, about to hear the Hinckleyville Symphony Orchestra. At this point, just to be cautious, we start the tape recorder running, and are glad we did because the orchestra plunges into an overture without further ado. This is later identified as the *Poet and Peasant* Overture, and is followed by a commercial. Next is a noble attempt at Ravel's Second *Daphnis and Chloe* Suite, at which point there is another commercial and our tape runs out. We are not surprised, because we have noted from an old record catalogue that *La Valse* occupies three 12-inch sides, and figuring 4½ minutes per side we estimated 17½ minutes for this one, at the very most. The *Poet and Peasant* usually occupied

Continued on next page